EUCHNER

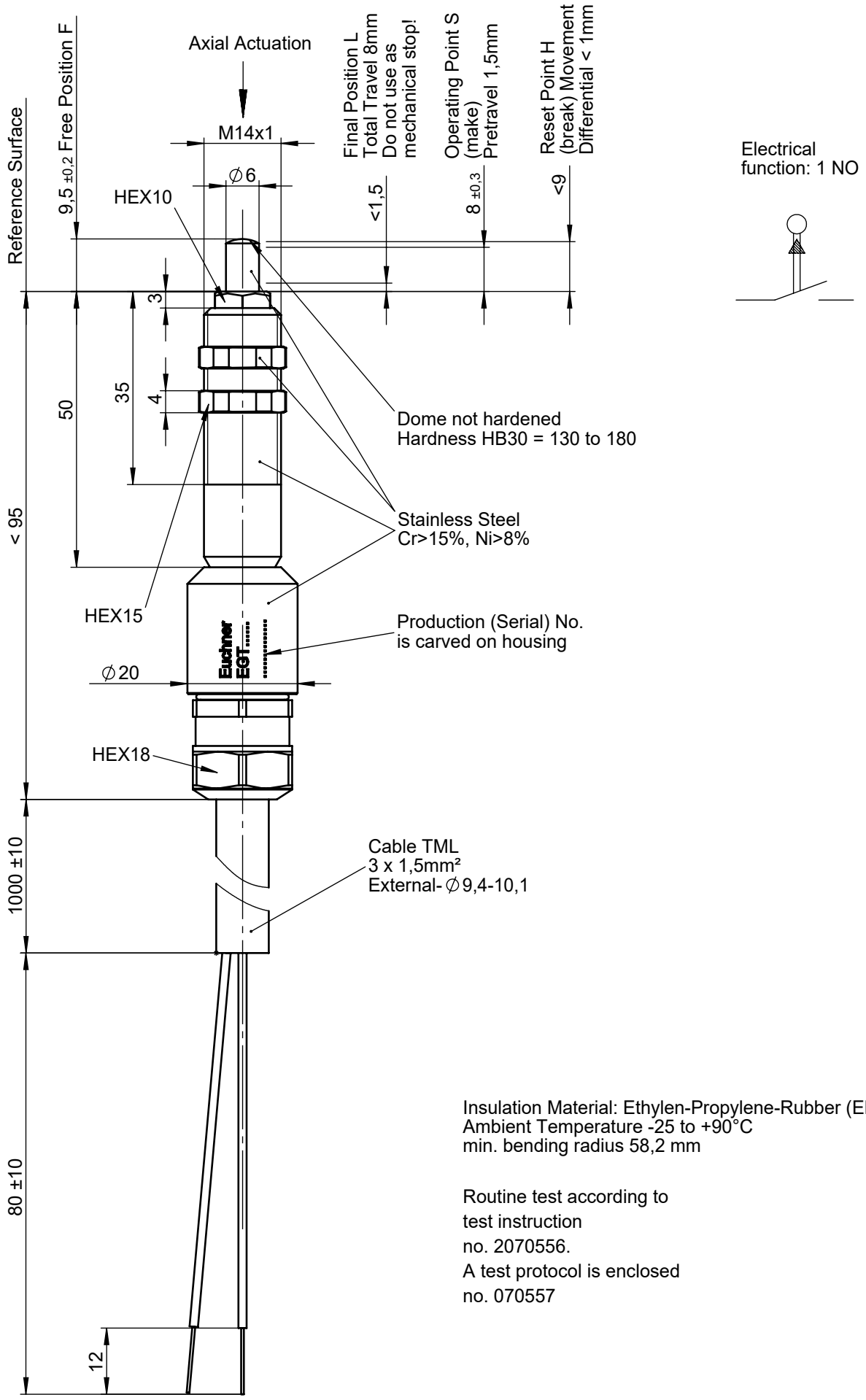

Insulation Material: Ethylen-Propylene-Rubber (EPR)
Ambient Temperature -25 to +90°C
min. bending radius 58,2 mm

Routine test according to
test instruction
no. 2070556.
A test protocol is enclosed
no. 070557

Maße in mm / Dimensions in mm
© EUCHNER GmbH + Co. KG
Technische Änderungen vorbehalten, alle Angaben ohne Gewähr / Subject to technical modifications; no responsibility is accepted for the accuracy of this information.

EUCHNER GmbH + Co. KG Kohlhammerstraße 16 70771 Leinfelden-Echterdingen Tel. +49/711/7597-0 Fax +49/711/753316 www.euchner.de info@euchner.de